C

SCALE: 35%

REGULATOR ASSEMBLY KEY:

CLASSIC = REGULATOR ASSEMBLY TOP WITH RISER
NUVO = REGULATOR ASSEMBLY TOP WITHOUT RISER
FLUSH = MANUAL FLUSH FEATURE
AUTO FLUSH = SOLENOID FLUSH FEATURE
NAV = NORTH AMERICAN VERSION "MHT"
IV = INTERNATIONAL VERSION "3/4" NPT"
APA = ACE PIPE ADAPTER
ARF = ADJUSTMENT RESISTANCE FEATURE
LPR = LOW PRESSURE RANGE

ITEM	PART NR.	QTY	DESCRIPTION
1	1573	1	REGULATOR PART: SOLENOID FLUSH MHT INLET - 24 VAC
2	898	1	CLAMP: SUPPORT PIPE TO FLOOR REGULATOR
3	2765	1	S-HOOK: ANTI-ROOST CABLE ANCHOR
4	206	1	SPRING: ANTI-ROOST
5	207	2	CLIP: ANTI-ROOST CABLE
6	2537	1	FASTENER: SCREW HEX WHD SELF TAPPING #8-18 X 1/2" LG
7	2089	2	FASTENER: BOLT HEX HD M6 X 1 X 16 LG
9	4145	1	REGULATOR ASSEMBLY PART: UNIT NUVO - ARF / LPR

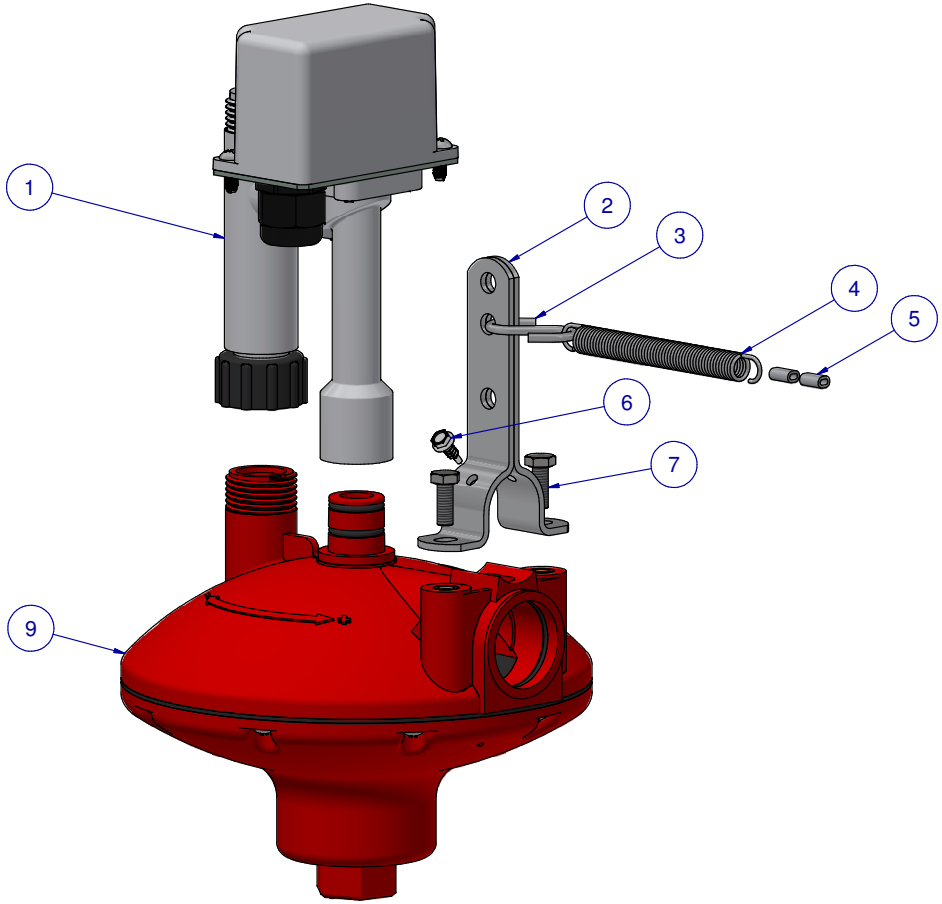

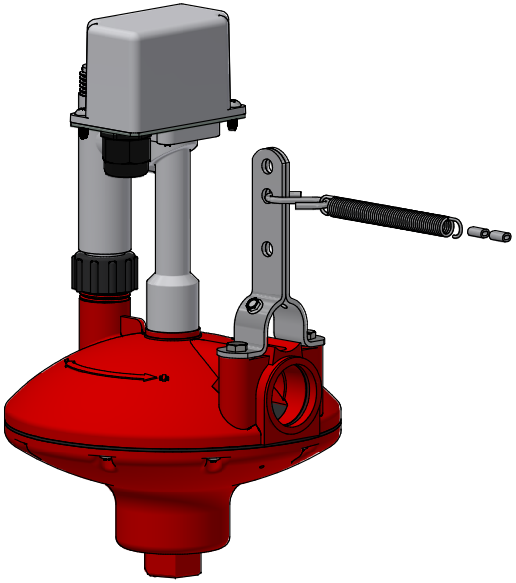

ZIGGITY SYSTEMS INC.
WWW.ZIGGITY.COM

REGULATOR ASSEMBLY: NUVO - AUTO FLUSH / NAV / ARF / LPR

DATE: 03-16-23

REVISION: 2

PART NR.: 4148