C

SCALE: 50%

SLOPE NEUTRALIZER ASSEMBLY KEY:

NUVO = SLOPE NEUTRALIZER ASSEMBLY WITHOUT RISER
APA = ACE PIPE ADAPTER
SPI = SUPPORT PIPE INTERFACE

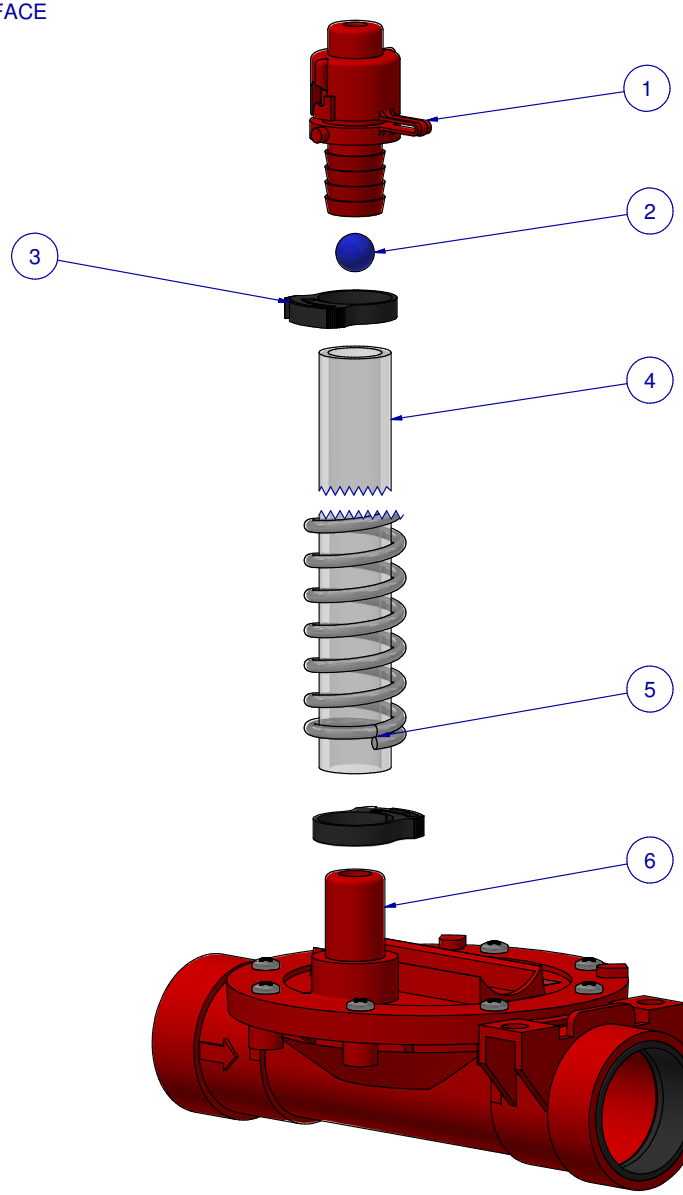

ITEM	PART NR.	QTY	DESCRIPTION
1	2005	1	RISER TUBE CAP
2	147	1	BALL: RISER TUBE
3	511	2	CLAMP: SNAP 0.746" - 0.848" DIA. - BLACK
4	122-24	1	RISER TUBE: 24" / 60 CM
5	1895	1	SPRING: RISER TUBE
6	4193	1	SLOPE NEUTRALIZER ASSEMBLY PART: UNIT 6"/15 CM REDUCTION - RIGHT

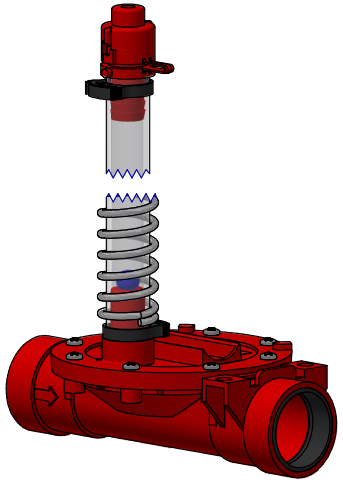

ZIGGITY SYSTEMS INC.
WWW.ZIGGITY.COM

SLOPE NEUTRALIZER ASSEMBLY: 6"/15 CM REDUCTION - RIGHT

DATE: 05-24-23

REVISION:

PART NR.: 4184